!!NOTE!!

(1) The differenctial signals on both TX/RX should have equal length and be close to each other, if possible
(2) When MOD[2] is HIGH then W5100S operates with BUS mode. If LOW, W5100S operates in SPI mode.
(3) Decoupling capacitors should be placed close to W5100S.
(4) To avoid the 100M overshoot, please place the 49.9 resistors and 0.1uF capacitor near the MDI pin of W5100S
(5) RSET_BG is the most important analog pin and users should keep the noisy source away from this pin.
(6) Option - Apply damping resistors for EMI reduction
(7) As close to transformer 2,7 pin as possible

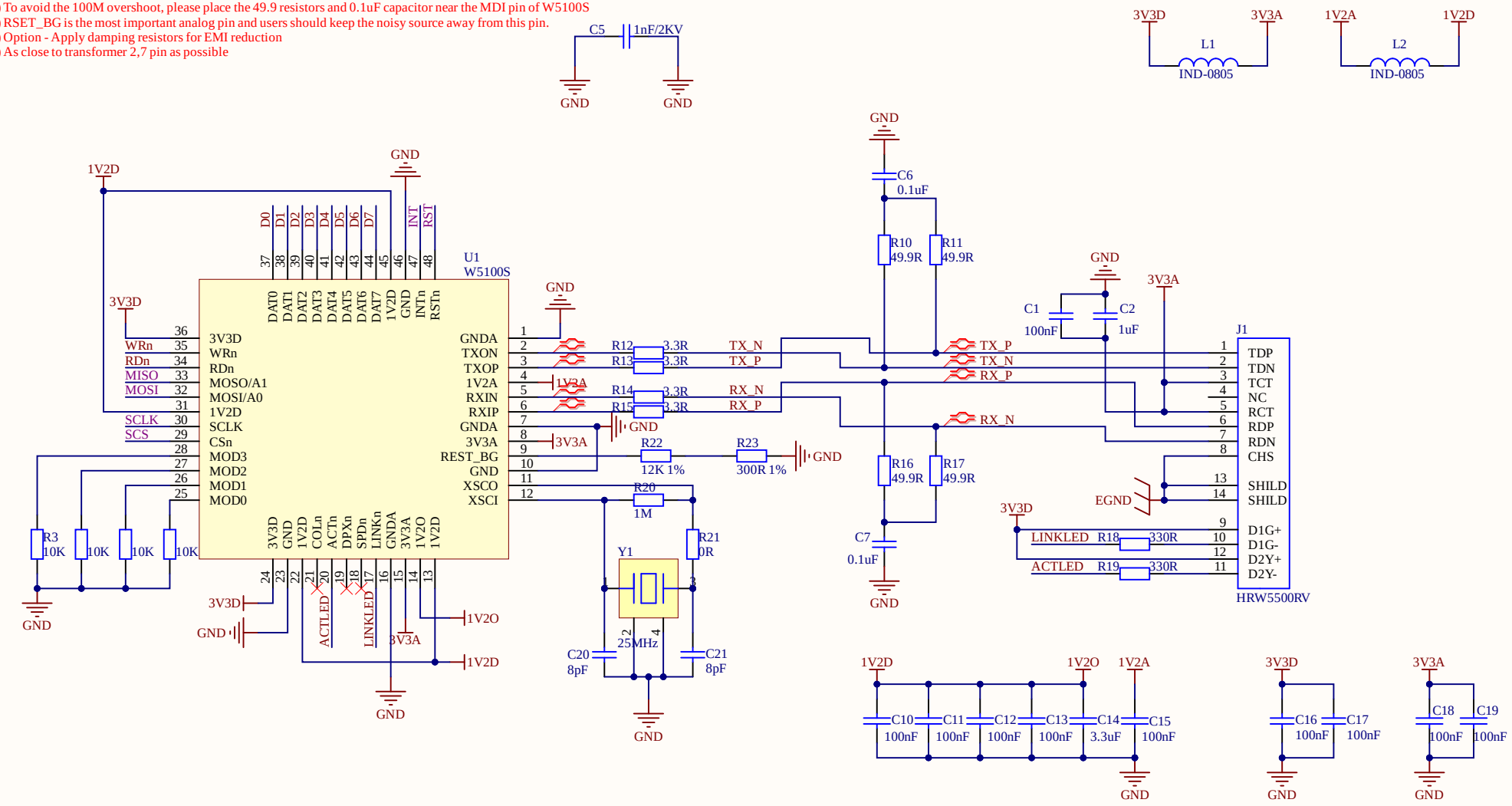


| Title | WIZnet W5100S Referen Schematic | |
|---|---|---|
| Size A4 | Number | Reference |
| Date: 2026/8/10 | | Sheet of |
| File: | | Down By |