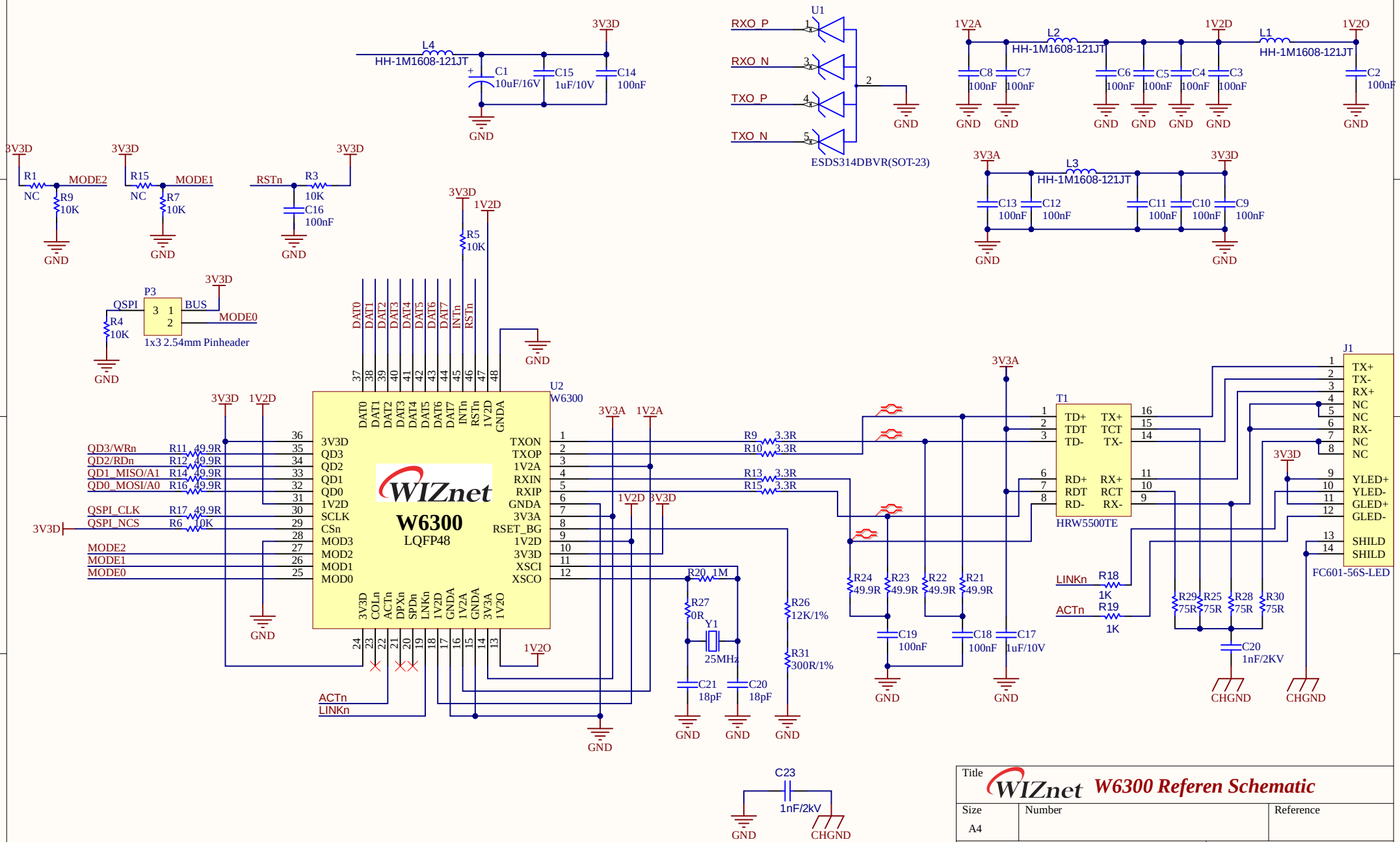
L4
HH-1M1608-121JT
C1
10uF/16V
C15
1uF/10V
C14
100nF
3V3D
GND
U1
RXO_P
RXO_N
TXO_P
TXO_N
ESDS314DBVR(SOT-23)
1V2A
L2
HH-1M1608-121JT
1V2D
L1
HH-1M1608-121JT
1V2O
C8
100nF
C7
100nF
C6
100nF
C5
100nF
C4
100nF
C3
100nF
C2
100nF
3V3A
L3
HH-1M1608-121JT
C13
100nF
C12
100nF
C11
100nF
C10
100nF
C9
100nF
R1
NC
R9
10K
MODE2
R15
NC
R7
10K
MODE1
RSTn
R3
10K
C16
100nF
R5
10K
P3
QSPI
BUS
MODE0
R4
10K
1x3 2.54mm Pinheader
U2
W6300
WIZnet
W6300
LQFP48
DAT0
DAT1
DAT2
DAT3
DAT4
DAT5
DAT6
DAT7
INTn
RSTn
1V2D
GNDA
3V3D
QD3
QD2
QD1
QD0
1V2D
SCLK
CSn
MOD3
MOD2
MOD1
MOD0
TXON
TXOP
1V2A
RXIN
RXIP
GNDA
3V3A
RSET_BG
1V2D
3V3D
XSCI
XSCO
3V3D
COLn
ACTn
DPXn
SPDn
LNKn
1V2D
GNDA
1V2A
GNDA
3V3A
1V2O
QD3/WRn
QD2/RDn
QD1_MISO/A1
QD0_MOSI/A0
QSPI_CLK
QSPI_NCS
MODE2
MODE1
MODE0
R11 49.9R
R12 49.9R
R14 49.9R
R16 49.9R
R17 49.9R
R6 10K
R9 3.3R
R10 3.3R
R13 3.3R
R15 3.3R
R20 1M
R27
0R
Y1
25MHz
C21
18pF
C20
18pF
R26
12K/1%
R31
300R/1%
R24
49.9R
R23
49.9R
R22
49.9R
R21
49.9R
C19
100nF
C18
100nF
C17
1uF/10V
T1
TD+
TDT
TD-
RD+
RDT
RD-
TX+
TCT
TX-
RX+
RCT
RX-
HRW5500TE
LINKn
R18
1K
ACTn
R19
1K
R29
75R
R25
75R
R28
75R
R30
75R
C20
1nF/2KV
CHGND
J1
TX+
TX-
RX+
NC
NC
RX-
NC
NC
YLED+
YLED-
GLED+
GLED-
SHILD
SHILD
FC601-56S-LED
C23
1nF/2kV
Title
W6300 Referen Schematic
Size
A4
Number
Reference
Date: 2026/8/10
Sheet of
File:
Down By