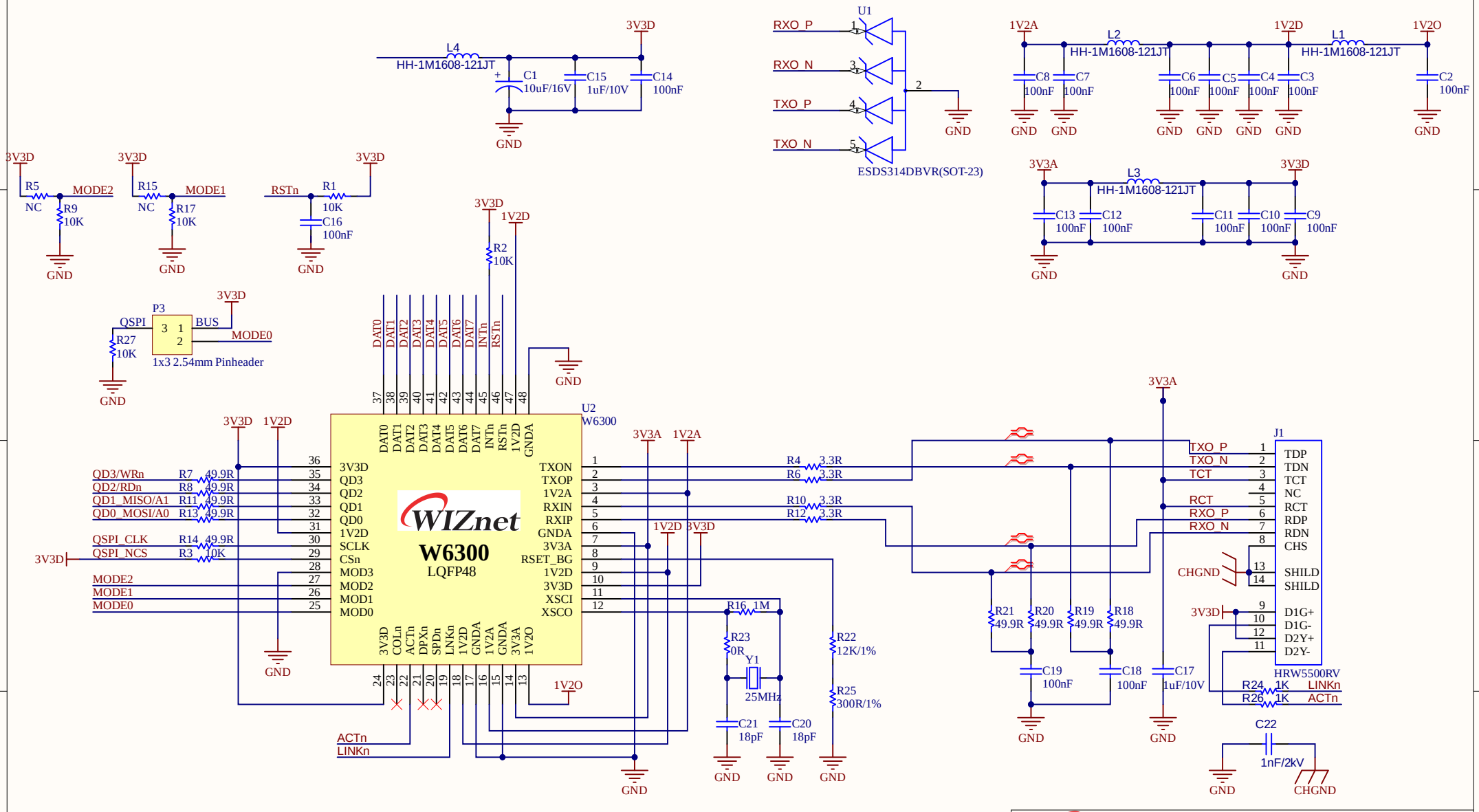


| Title | WIZnet W6300 Referen Schematic | |
|---|---|---|
| Size A4 | Number | Reference |
| Date: 2026/8/10 | | Sheet of |
| File: | | Down By |